3116
(8x2)MAV

Fuel Saver
Profit Maker

Market trends show a shift towards 31 T segment. With 'H' series engine and an inline FIP, 3116 offers the best in fuel efficiency. Add to it the optimised power train and rugged aggregates and you have a durable profit machine, thanks to low operating costs.

- Powered by 'H' series BSII engine
- Optimised engine power for better mileage
- Inline FIP user-friendly
- Uprated suspension

ASHOK LEYLAND

HINDUJA GROUP

3116
(8x2)MAV

Advantage 3116 (8x2) MAV

- Powered by 'H' series BSII engine
- Optimised engine power for better mileage
- Inline FIP user-friendly
- Uprated suspension

Applications

- Market Load and Parcel
- Tankers - Milk, POL, Chemical, Bitumen
- Aggregates- Cement, Coal
- Bulkers - Cement, Flyash

Optional Advantages

- Radial Tyres
- Cowl / Fully built version
- VISHVAS - Annual Maintenance Contract (AMC)
- Extended Warranty Package
- Extended Service Package

Anytime, Anywhere Service

Nationwide coverage through strong network of:

- More than 170 Dealer outlets for sales/service/parts support
- Above 140 Authorised Service Centers
- Ashok Leyland trained mechanics (approx 12,000)
- Readily available spare parts - LEYPARTS
- ALWAYS - 24x7 National Helpline Service
- Mobile Service Vans

Ashok Leyland ALWAYS 24 X 7 National Helpline 1800 11 7890 011 2561 5343

Leyparts®

VISHVAS TOTAL MAINTENANCE SOLUTIONS

The specifications are liable to change due to continuous improvements and are for reference only.
Do not drill or weld on frame.

Specifications

Engine	'H' Series 6 ETI 2K Turbocharged Intercooled with inline FIP
Maximum Power	163 PS @ 2400 rpm
Maximum Torque	575 Nm @ 1600 - 1800 rpm
Clutch	380 mm dia. Ceramic disc with Clutch booster
Transmission	6 speed ZF synchromesh gear box with FGR 9.2:1
Front Axles	Twin front axles. 'I' Section. Reverse Elliot; Twin steerable
Rear Axle	First Rear Axle: Single speed hypoid with RAR 5.83:1 Second Rear Axle: Heavy duty tubular - Dummy axle
Frame Dimensions	All steel ladder type with bolted construction
Suspension	Front : Semi elliptical multileaf uprated suspension Rear : Semi elliptical multileaf with equalizer link
Brakes	Full air dual line with Drying and Distribution Unit (DDU)
Parking brakes	Flick valve operated pneumatic hand brake on rear wheels only
Fuel Tank Capacity	330 liters
Battery	24 V (2 x 12 v) - 80 AH
Tyres	10.00 x 20 - 16 PR Nylon

Major Dimensions (in mm)

Wheel base	5200
Front Overhang	1468
Rear Overhang	2178
Overall Length	9746
Overall Width	2432
Front track	1963
Rear track	1816
Min. ground clearance	260
Min. Turning circle dia	23000
Load body Length	7465

Performance

Max Speed in Top Gear	79 kmph
Maximum Gradeability	14.82%

Weight (kgs)

	Unladen	Laden
First Front Axle	2210	6000
Second Front Axle	1630	6000
Rear Axle	3140	19000
Total	6980	31000

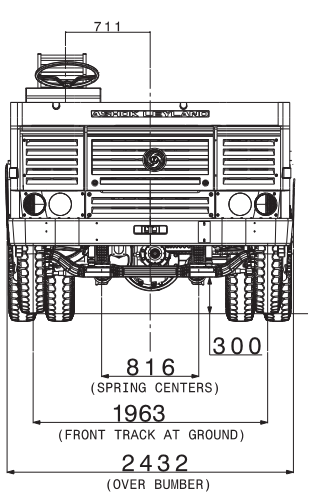

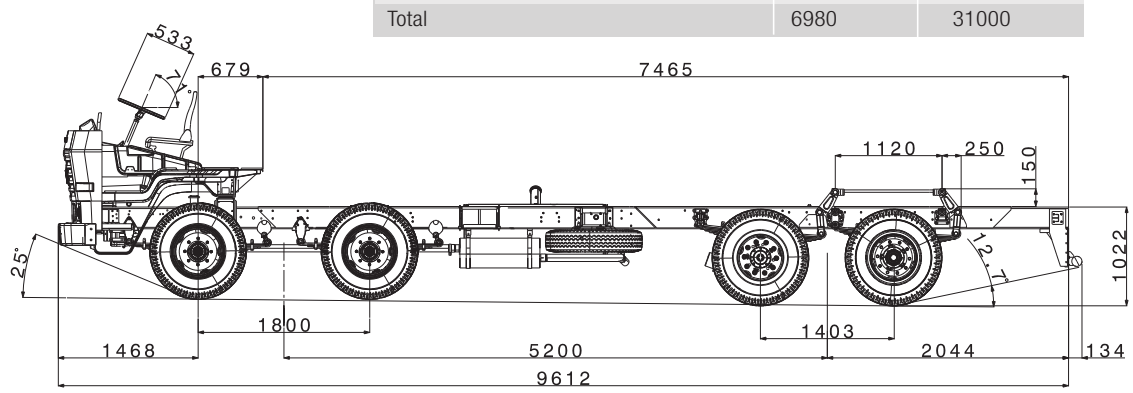

ASHOK LEYLAND

ASHOK LEYLAND, Marketing Division: 1 Sardar Patel Road, Guindy, Chennai - 600 032 Ph: (91) - 44 - 2220 6000 Fax: (91) - 44 - 2220 6001
visit us at www.ashokleyland.com

HINDUJA GROUP